SAE INTERNATIONAL

ad

automotivedesign.eu.com

June 2014

DUPONT'S AUTOMOTIVE DIRECTOR INTERVIEWED

FOCUS ON:

- SAFETY
- MATERIALS
- INSTRUMENTATION

EXCLUSIVE: NEW FORCE IN ENGINEERING

Contents

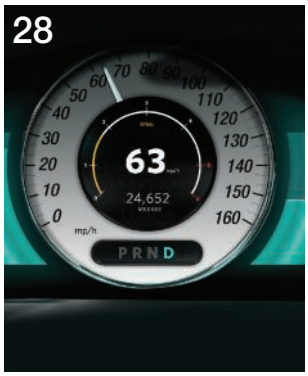

30

Williams engineers an impressive future

To many, the link between Formula One and road transport has been, at best, tenuous. But that is less so today, as you can read on pages 21-25.

Automotive Design was granted exclusive access to the new engineering consultancy arm of Williams Grand Prix Engineering, to be formally announced in July as Williams Advanced Engineering.

It is an impressive facility in its own right, staffed by engineers, many of whom have honed their skills and knowledge at racetracks around the world. But when it is allied to the men and women who are tasked with ensuring that the Williams F1 team is successful on an almost weekly basis during the Grand Prix season, then the engineering skills and brain power that is available is truly striking.

Of course, Williams isn't the first team to go down this path: Lotus Engineering was born out of the eponymous race team, while McLaren and Ferrari both produce road cars.

And with mainstream manufacturers like Mercedes-Benz and Renault, to be joined next year by Honda, pursuing their innovative hybrid technologies, then the relevance between the two disciplines is closer than ever.

As WAE's managing director Craig Wilson explained to me, he and his team will be looking beyond the realms of road transport for customers. These are exciting times for Grove.

The interview with Dupont's new global automotive technology director Dr Jeffrey Sternberg (pages 12-15) raises an interesting issue for both the motor industry and producers of polymer – do they really understand what the other wants and can deliver?

In a time when weight is a major issue, and this was something Craig Wilson commented on, engineers trained in metal don't necessarily appreciate the virtues of other materials, while the polymer producers might not fully understand the needs of the automotive sector. Could it be, then, that both are losing out?

Ian Adcock, Editor in Chief

Editor in Chief: **Ian Adcock**
iadcock@automotivedesigneu.com
Sub Editor: **Brian Wall**
bwall@findlay.co.uk
Editorial Director: **Kevin Jost**, SAE International.
kjost@sae.org
Managing Editor: **Jean L. Broge**
Senior Editor: **Lindsay Brooke**
Associate Editor: **Patrick Ponticel**
Associate Editor: **Ryan Gehm**
Assistant Editor: **Matt Monaghan**
Custom Electronic Products Editor: **Lisa Arrigo**
Freelancers: **Kami Buchholz, Stuart Birch, Jack Yamaguchi,**
Contributing Editors: **Steven Ashley, Dan Carney, Terry Costlow, John Kendall, Bruce Morey, Paul Weissler**
Art Editors: **Martin Cherry, Neil Young**
Illustrator: **Phil Holmes**
Production Manager: **Nicki Mckenna**
nmckenna@findlay.co.uk
Publisher: **Scott R. Sward**
ssward@sae.org Tel: 001 610-399-5279
Circulation Manager: **Chris Jones**
cjones@findlay.co.uk

Advertisement Sales
Belgium, Benelux, Denmark, Finland, France, Ireland, Italy, Netherlands, Norway, Scandinavia, Spain, Sweden, UK
Chris Shaw
Tel: +44 (0) 1270-522130 M: +44 (0) 7983-967471
chris.shaw@chrisshawmedia.co.uk
Austria, Czech Republic, Germany, Hungary, Poland, Switzerland
Sven Anacker
sa@intermediapartners.de
Tel: +49-202-27169-11 Fax: +49-202-27169-20
Japan
Shigenori Nagatomo
Akutagawa Bldg, 7-7 Nihonbashi Kabutocho
Chuo-ku, Tokyo 103-0026 JAPAN
Tel: +81-3-3661-6138 Fax: +81-3-3661-6139
nagatomo-pbi@gol.com
USA
Sales Manager:
Marcie Hineman
hineman@sae.org Tel: 001 724-772-4074
Print Advertising Coordinator:
Linda Risch
risch@sae.org Tel: 001 724-772-4039

Automotive Design
Tel: 00 44 (0)1322-221144
Fax: 00 44 (0)1322-221188
www.automotivedesign.eu.com
ad@automotivedesign.eu.com

ISSN 2043-0299
Published: February, April, June, August, October and December by
AD Media Europe
Hawley Mill, Hawley Road,
Dartford, Kent, UK. DA2 7TJ

Annual subscription (6 issues per year) for readers in the UK is £45, overseas is £66 and airmail is £86.

Origination: **CC Media Group**
Printed in the UK by
Pensord Press

Moving on? If you change jobs or your company moves, please contact circulation@findlay.co.uk to continue receiving your copy of Automotive Design.

Findlay Media is a member of the Periodical Publishers' Association

Slimline Passat shapes up for Paris launch

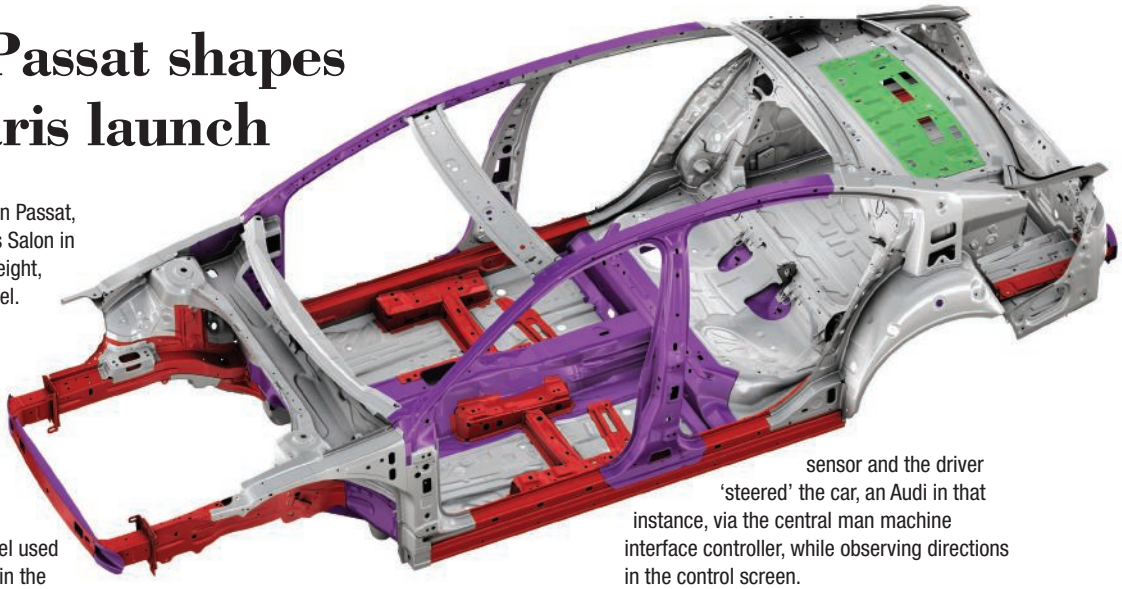

Volkswagen's eighth-generation Passat, due to be launched at the Paris Salon in October, has shed 85 Kgs in weight, compared to the outgoing model.

The body-in-white and interior saved 33Kgs alone, with the heel board being produced from a tailor-rolled blank and extensive use of hot formed and ultra high strength steel. However, the most innovative part of the structure is the aluminium panel used as the rear parcel shelf (green in the accompanying picture). Dr Johannes Neft, head of body engineering, explained that the joining technology – described as 'resistance element welding' – is a breakthrough VW-patented technology that allows steel and aluminium to be joined together for the first time.

While an adhesive is used initially to locate the panel and provide a barrier between the two metals to prevent corrosion, the aluminium sheet is secured in place by a form of steel rivet that is clamped tight from both sides. Neft suggested that future developments of this system could include aluminium floor pans and boot floors. Side members have also been optimised to deliver a 25% improvement in stiffness under side impact conditions.

The complete body-in-white, he explained, weighs less than 280Kgs, yet overall body rigidity has gained 2000 Nm/deg in the estate version to 25,000 Nm/deg and 30,000 Nm/deg in the saloon.

The new 'Bionic' four-link rear suspension is 60% stiffer and 4.7Kgs lighter, with 110mm longer suspension travel; the newly designed electronically controlled 'semi-active' dampers feature a new larger valve system, in which the fluid always goes in the same direction, irrespective of whether the damper is in compression or extension. "The dampers are a little bigger," said Holger Hagedom, head of brake development and chassis tuning, "but they offer more sporting handling, without sacrificing ride quality."

A new, bi-turbo diesel engine debuts in the 4Motion all-wheel drive models, the two-litre motor developing 176kW and 500Nm at 1750rpm. Although engineers were being reticent about divulging too many details, the 81.0 mm bore/95.5mm stroke engine uses Bosch piezo 10 nozzle injectors running at 2500bar; turbo boost is rated at 3.8 bar, with only the larger of the two turbos functioning beyond 2500rpm, although it starts to merge in progressively well before that engine speed.

A world-first for the Passat is VW's patented 'Trailer Assist' that was first driven by *Automotive Design* in November 2011. In that first iteration, the tow ball contained an angle sensor and the driver 'steered' the car, an Audi in that instance, via the central man machine interface controller, while observing directions in the control screen.

However, that system had shortcomings, according to head of electronic development, Dr Volkmar Tanneberger, principally associated with low temperatures and tow bar load. The mark two system uses a complex algorithm within signal recognition software and the rear camera to measure the tow bar's length and then calculate the reversing angle. In this instance, the electric mirror toggle switch acts as the left-, right-controller.

Tanneberger also said that the third-generation parking assistant used in the Passat allows parallel parking, with only 40cms of additional space, as well as 'nose in' when parking at right angles; the fourth-generation system is already under development, and will include reverse right angle parking and 'nose in' parallel parking.

Other highlights of the new car include horizontal LED brake lights that flip to the vertical under heavy braking to alert following drivers and steering reduced from 500° to 380°, or 2.1 turns lock-to-lock, rather than 2.75 as in the outgoing model.

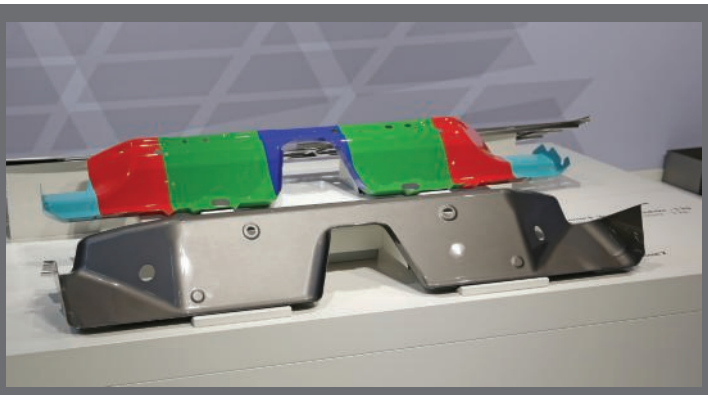

Impressive new bi-turbo diesel (left), tailored blank heelboard at the rear (right).

Ford's steer is towards more agile and fun

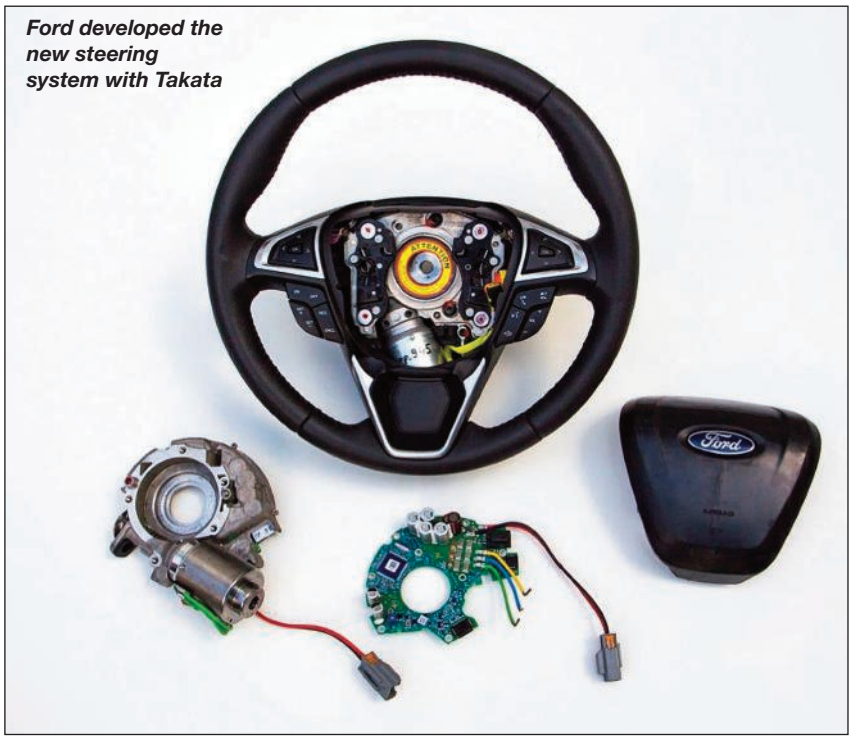

Ford developed the new steering system with Takata

A new generation of steering technology that helps make vehicles easier to manoeuvre at low speeds and in tight spaces will be introduced by Ford in 12 months. At higher speeds, the new technology will help make the vehicle more agile and fun to drive, it is claimed.

"First and foremost, all Ford Motor Company products have to offer a great driving experience," said Raj Nair, Ford group vice president, global product development."

Adaptive Steering changes the ratio between the driver's actions at the steering wheel – the number of turns – and how much the front wheels turn. In traditional vehicles, this is a fixed steering ratio. With Ford's new Adaptive Steering, the steering ratio continually changes with vehicle speed, optimising the steering response in all conditions.

At lower speeds, such as when pulling into a parking space or manoeuvring in tight quarters, the new system makes the vehicle more agile and easier to turn, as it dials more steering into the road wheel. Each

Ford to license inflatable safety belt technology

As a follow-up to the story above, Ford is also offering its patented inflatable safety belt technology to other companies and industries, including competitive automotive manufacturers. The availability of licences may lead to the wider adoption of inflatable safety belts as other OEMs seek to enhance passenger safety. The technology is potentially applicable to other forms of seated-passenger transportation, including military use and airborne passengers travelling by helicopter or 'plane, and even for water travel.

"Ford's long-standing commitment to democratising technology goes beyond our customers," said Bill Coughlin, president and CEO, Ford Global Technologies. "In this case, the wider adoption of inflatable safety belts has the potential to make travel safer and help mitigate passenger injuries – especially among children and the elderly."

In everyday use, inflatable safety belts operate like conventional seat belts. In a crash, the inflatable safety belt deploys over a vehicle occupant's torso and shoulder to help distribute crash forces across up to five times more area than a traditional safety belt. Spreading the pressure over a larger area helps reduce pressure on the passenger's chest, and helps control head and neck motion. The inflatable safety belt is currently available on Ford Explorer, Flex, Fusion and the upcoming 2015 F-150, as well as Lincoln MKT and MKZ for outboard second-row seating positions.

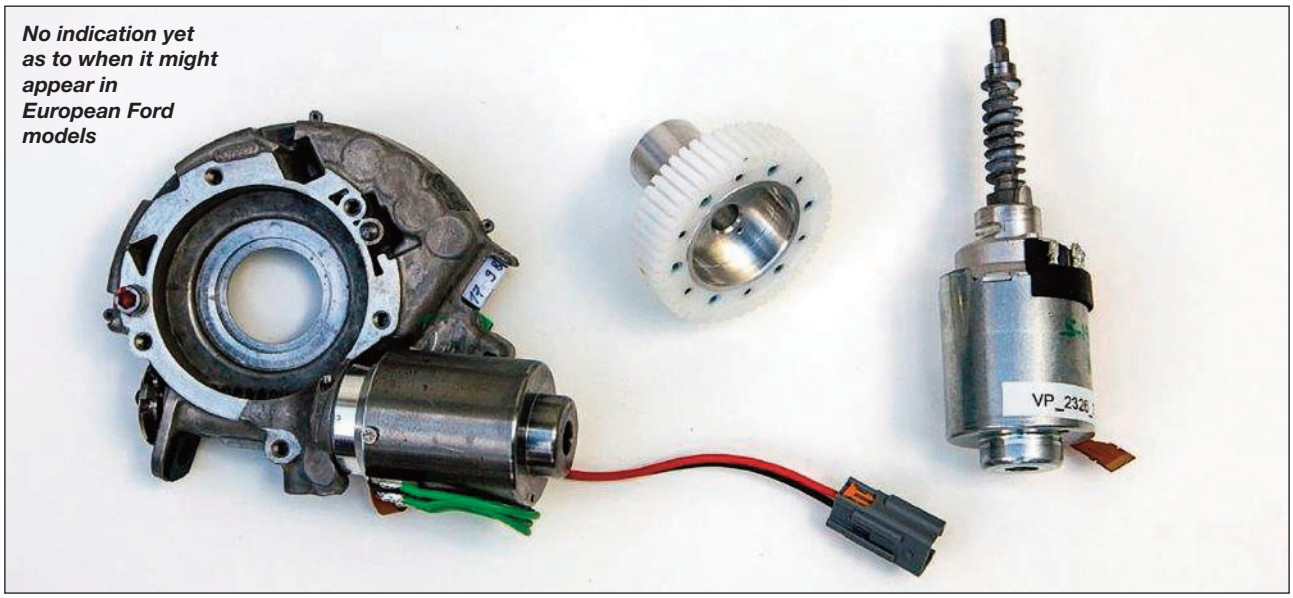

No indication yet as to when it might appear in European Ford models

low-speed manoeuvre requires less turning of the steering wheel. At highway speeds, the system further optimises steering response, enabling the vehicle to react more smoothly and precisely to driver input.

The system uses a precision-controlled actuator placed inside the steering wheel and requires no change to a vehicle's traditional steering system. The actuator – an electric motor and gearing system – can essentially add to or subtract from a driver's steering inputs. The system was developed for production by Ford in collaboration with Takata.

Setting the right tone for Alfa Romeo MiTo

The gradient surface technology developed by Benecke-Kaliko (*Automotive Design*, July-August 2013) is now in series production on the instrument panel of the new Alfa Romeo MiTo. The colours on the TEPEO foil manufactured by Benecke-Kaliko seem to have been sprayed on, transitioning from black to red.

"With our gradient surface technology, we allow automotive manufacturers and suppliers to produce two-tone interior components, using just one single material sheet," notes Michael Mäker, head of the surfaces and design technology centre at Benecke-Kaliko.

The surface manufacturer's developers had one year to realise the customers' specifications for the two-tone design of the instrument panel surface and optimise the printing method involved. The main challenge was achieving a uniform colour gradient for the spray-mist effect and positioning the blend as desired.

F-Type coupé benefits from new bonded roof strategy

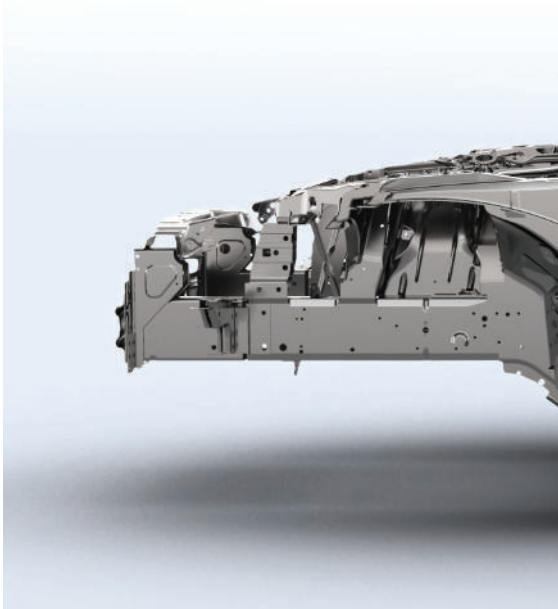

The new F-Type coupé is the first Jaguar Land Rover product to benefit from a new bonded roof strategy, according to Mark White chief technical specialist body structures. "F-Type coupé was the ideal car to trial out the bonded roof strategy, so that we could use a metal, glass or carbon fibre roof in the same aperture, using the same equipment."

A high modulus adhesive, similar to that used to bond in windscreens, is used to secure the three roof panels that are installed on the same station at trim and final assembly; the biggest advantage for Jaguar being that it doesn't have a roof station lying idle, due to varying customer demand.

The roofs were all designed to deliver almost identical levels of torsional stiffness between 31,300 and 33,000 NM/deg.

"Effectively, the whole upper roof structure is designed around that and the new USA roof crush standards that are three time gross vehicle weight," White explains.

"We actually designed for four times, because we wanted a safety factor for our customers beyond the legislation.

"The third factor was that chief designer Ian Callum wanted a very low roof line with very slim and elegant pillars with, in an ideal world, no 'B' pillars on the coupé. Clearly, we wanted to deliver that and, from a driver's point of view, you want very little 'A' pillar obscuration and no 'B' pillar obscuration."

HYDROFORMED RAIL

To achieve that, Jaguar has used a hydroformed cant rail it pioneered on the second generation XJ. "By putting the hydroformed rail in there, you're actually putting the maximum-sized section you can get in the available space with high-strength aluminium tube starting at the base of the 'A' pillar and running back to the 'B' pillar behind the quarter light," he adds.

At either end of this beam, there's a casting that acts as a node, which locks it in to the main structure, in essence making a big reinforcement ring that ties the 'A' pillar to the sill, to the hydroformed extrusion back into the 'B' pillar casting and back into the sill.

Two rear beams behind the seats are angled outwards, with the top further outboard than the bottom, which prevent the cant rail collapsing inwards and downwards if it's loaded up in a rollover accident. Jaguar has further developed its stamping processes to achieve a 300mm deep rear shoulder section that it believes is currently the deepest in the automotive industry, although White admits a "slightly softer" aluminium is used to achieve that.

JLR as a whole is on target to achieve 75%

Making light of environmental challenges

Magna Steyr has developed an eco-friendly runabout that develops less than 50 g/kms, thanks to its highly efficient 660cc three-cylinder turbocharged engine, running on CNG, and a novel body construction that weighs 90Kgs less than a conventionally built steel body-in-white. In total, the MILA Blue is 300Kgs lighter than a conventional A-segment hatch.

Bruno Götzinger, project manager lightweight advanced development, Magna Steyr, explained that by "using aluminium sheet, castings and profiles, we were able to keep the weight to a minimum. Where necessary, we used steel – for instance, the 'B' pillar for crash resistance and fibre composite parts for the bonnet, bumper, door and roof areas. The complete structure is then riveted, screwed, bonded and welded.

DEEP DRAWN

"The inner trim is made from organic sheet material and, to improve stiffness, endless fibre reinforced plastic, instead of epoxy matrix, is employed, resulting in sheet material that can be deep drawn, like steel," he says. Doors consist of a composite outer skin, mounted on aluminium profiles, with a paper core bonded to the inside that doubles as the inner trim. "Lexan plastic replaces side glass and there's a single sliding panel large enough to take a big MacDonald's cup," adds Götzinger. "You save on all the winding mechanism and, as the car is air-conditioned, you don't need to open the windows."

To get the best torque from the tiny engine, CNG is injected directly into the cylinder, rather than the port, and the exhaust is mounted directly to the engine, as on a motorcycle. Suspension is

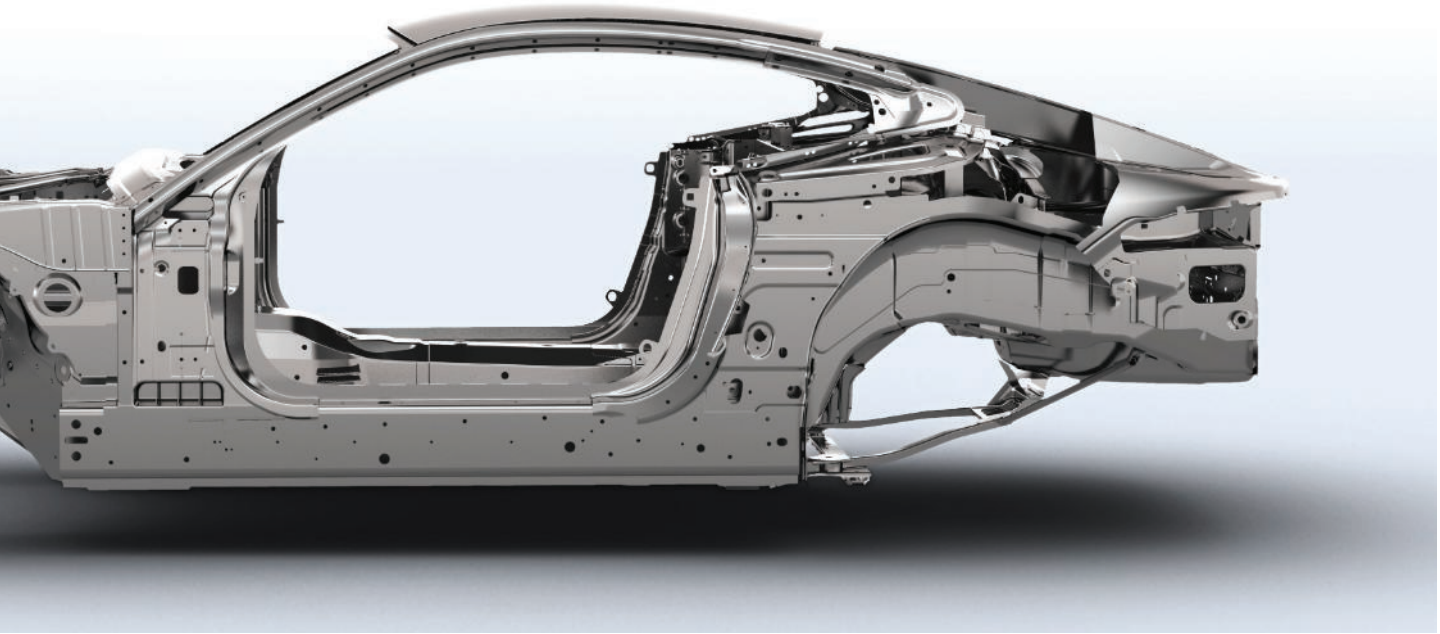

recycled aluminium by 2020. "The trick is to get external vendors to the same place as we're at," he says.

ON A PAR

The next stage is to get the Solihull manufacturing site to the same level as Castle Bromwich, where the 'F' Type is built, with the former Ford plant at Halewood switching to aluminium by 2016, due to the fact that the former steel assembly plant needs a recycling centre installed.

"You will see things that have been piloted on F- Type that we will apply to XE (Jaguar's new saloon due at Paris) in higher volumes. There will be new recycled aluminium, for example, that takes us on towards that 75% target."

It is believed that XE will feature 'B' pillars manufactured using Composite Metal Technology's Fibacore process, featured in the last issue of *Automotive Design*.

by composite transverse springs, front and back.

Due to the vehicle's comparatively light weight, crawling along in stop-and-go traffic and cruising up to 30km/h can be done electrically, using power from the vehicle's 12V-based electric motor and start-stop system.

Götzinger claims Magna could build 30,000 MILAs a year, using these assembly techniques and materials.

IBM and Robert Bosch form collaborative alliance

IBM and Robert Bosch GmbH have announced a collaborative partnership to create a new data-driven model to more efficiently and accurately develop intelligent, interconnected automotive products. Built on open standards and IBM design tools, the continuous engineering software platform can quickly scale to thousands of partners, clients, engineers and technicians.

By engaging all relevant stakeholders in the automotive supply chain and elevating the right data from them, the standards-based platform will cornerstone Bosch's long-term vision for cross-industry collaboration to quickly deliver increasingly smarter and safer vehicles.

Bosch recognised this need for standards-based integration between all engineering teams and organisations in the supply chain. Additionally, an emerging generation of software engineers is increasingly demanding more transparent communication, flexibility and collaboration across the industry. By unlocking core engineering processes across teams and development partners, the IBM platform enables Bosch to achieve a key of efficient engineering by establishing a strategic, transparent reuse approach.

"Our aim is greater agility, accelerating product innovation and delivery," said Dirk Hoheisel, board member at Robert Bosch GmbH. "By implementing a software and systems design platform founded on integration and reuse, we're able to improve our integration and increase development quality – setting higher safety and quality standards not only for our company, but for the industry as a whole."

News in brief

Dearman appointment

The Dearman Engine Company is strengthening its team as it prepares for its liquid-air engine to begin on-vehicle testing, with the recruitment of Nick Owen to the position of chief technology officer. Owern is currently with E4tech (UK) and was due to join Dearman in early June.

Drayson launch

Lord Drayson has announced the formation of Drayson Wireless Limited, a ground-breaking venture that will seek to commercialise wireless energy technology developed over a number of years at Imperial College London.
Working closely with Imperial Innovations plc, Drayson Wireless will rapidly bring the technology to market in numerous applications and sectors.

Gold-plated resistance

Isabellenhütte has introduced the VMx-A resistors, which are not just suitable for component mounting by means of reflow and IR soldering, but can also be mounted with conductive adhesive. The advantage of the gold-plating is that it allows models such as the VMP-A to be used in high-temperature applications. That makes it ideal for high-density integration applications and enables bonding with high-temperature circuit boards.

And the winner is...

NGF which has won the Queen's Award for Enterprise in recognition of the design and manufacture of small filament diameter glass cords, which, when coated in rubber latex in a chemical dipping process, are uniquely oil resistant and so capable of reinforcing timing belts that run in oil.
This application greattly reduces noise and carbon dioxide emissions, and increases the fuel economy of automobile engines.

Gasket breakthrough

Working with Ford Motor Company, Henkel has developed an anaerobic gasketing sealant for highly stressed engine joints. With exceptional flexibility, Loctite 5189 meets the requirements of the on line blow-out test, thus eliminating the cost of extensive manual rework and offering robust sealing for high-volume engine manufacturing.

Pistons: steel makes its bid to take over from aluminium

Engine manufacturers and OEMs are turning towards replacing aluminium pistons with steel ones, according to Federal Mogul's director global pistons and powertrain energy, Norbert G Schnieder.

"There are several engine companies that we're working with on steel pistons for passenger cars," he confides, "but they don't want us to talk about who they are," he said.

"The main reason is fuel efficiency, because, if you tweak certain piston designs, the biggest impact is the fitting clearance on friction. If you have a big clearance, we can easily cut the friction by 20-30%."

While under operating conditions, the difference between aluminium and steel pistons is that under hot conditions a steel piston will have a larger clearance than an aluminium one, although this is reversed when it's cold, due to aluminium's higher thermal expansion.

Steel pistons can also go to higher firing pressures than aluminium ones, thus aiding fuel efficiency. "These are the two reasons for opting for steel pistons: the real friction of the piston and, secondly, it's the more fuel-efficient combustion."

WEIGHTY MATTERS

"Piston weight depends where you are coming from," Schneider explained. "We have engines with a fairly tall aluminium piston replaced with a lighter steel piston; that means the weight of the pin is also lower, so you can reduce 10% of reciprocating mass.

"So, you can then do two things: lower block height, which means less weight and more space under the bonnet, or, you can make the con rod longer with less side force on the piston and again less friction. But that difference is so small, it can't be measured. In real engine testing, it's very difficult to measure a few percentage savings. If the difference is less than half a per cent, you just have to trust the results.

"But if you cut down the compression height by 10% in a small engine, it may be half a centimetre shorter, whereas, in a bigger engine, its 1.5cms. It's so complex, because we have different compression heights from

Music to your ears

Harman's 'Clari-Fi' software has been developed to restore compressed audio files to their original quality. "A compressed audio file loses up to 90% of the data. So a CD file of three minutes is about 30 megabytes, whereas a good MP3 file of the same length is about three megabytes – so 27 megabytes is lost," explains Armin Prommersberger, vice president automotive audio.

And he goes on to point out: "It loses the emotional content, because it takes away the substance of the voice, the wideness of the sound and the clarity of the music – this is what were bringing back in real time."

The algorithm looks at the signal, detects which part of it is missing and uses "a very educated guess" to reconstruct the music in real time. According to Prommersberger, the algorithm is also based on psycho-acoustic knowledge and how music is perceived by the brain. "For example, if you take away 100Hz from the lower bandwidth, you would say there's something wrong with the system, as there's no bass, because our brain computes bass as a quality factor. But if you take 100 Hz from 20,000 down to 19,900, you wouldn't recognise it.

"You need to know a lot about perception; it's a mixture of maths, perception, music psychology and systems engineering of the car or environment."

Federal Mogul's Norbert G Schnieder, left, and Andreas Paulisch

one engine to another. The stroke remains the same, so this is physical downsizing, because the displacement remains unchanged."

In a second development, Federal Mogul revealed that it is working with Ford on a new heat shield technology that will go into series production next year.

Andreas Paulisch, senior manager engineering and programme management powertrain sealing and gaskets, pointed out that installing the system on the exhaust downpipe helps maintain exhaust gas temperatures. "If you're looking at heat transfer back into the engine compartment, you have much a higher start temperature to go from, with more energy recirculating back into the engine.

QUICKER WARM-UP

"That affects exhaust gas recirculation, meaning there will have to be a vacuum in the crankcase, which right now is an issue for some applications. The advantage is that you achieve a quicker warm-up time and light off for the catalysts. It also helps with stop-start applications; the engine doesn't cool down, but it does drop in temperature quite a bit and this would definitely help.

"The demand is coming more from downsized engines right now, because they're the main focus given the regulatory demands coming out. But I do see it coming in higher-powered engines in the future," he predicted.

DUPONT:

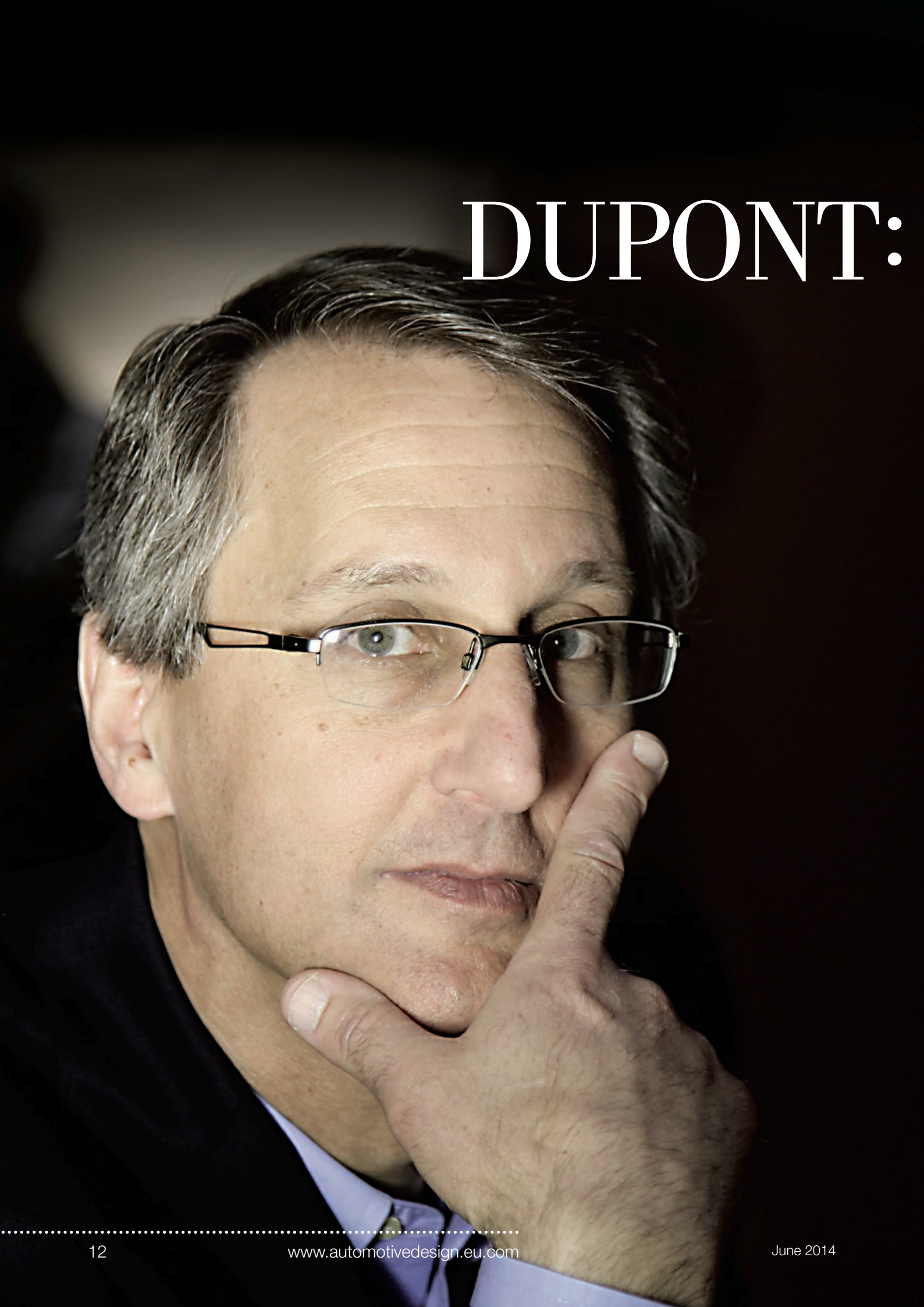

from art to part

DuPont's newly appointed global automotive technology director Jeffrey Sternberg, in conversation with Ian Adcock

"Let me start off by saying that DuPont works closely with customers to find science-based, sustainable solutions to address the needs facing the automotive industry. By that, I am including fuel economy, reducing emissions, wanting to make the car safer, but fun to drive as well. What DuPont brings to the table is the broad materials portfolio we have, offering more than 100 high performance product families that include polymers, composites, fibres, chemicals, pastes and films, as well as electronic applications.

"We also have world-class capabilities in applications and development – from parts design to computer aided modelling, performance or materials, parts process development and prototype parts for evaluation. And we can tap into 12 innovation centres and 10,000 scientists and engineers around the world. What I would call 'Everything from art to part'."

INTEGRATION IMPERATIVE

Sternberg, a 26-year veteran with DuPont who took up his new role at the beginning of the year, is keen to emphasise that the 112-year-old company is more than just a materials supplier. "Customers want integrated solutions, not just a resin that's thrown over a fence. We are a solution provider, delivering the materials, the design and development, supply chain alignment and processing capabilities for cost-effective solutions and pride ourselves on being able to offer the entire package not just to the OEMs, but also the supply chain."

He cites as an example of this integrated approach a new combined cross cooling system on Ford's latest 3.5-litre EcoBoost V6, which was recognised last year by the Society of Plastic Engineers as "one of the most innovative uses of plastics", says Sternberg, who explains: "This part is on top of the engine and allows the coolant to bypass the manifold as it circulates throughout the engine. The incumbent part was made from brazed metal, and was heavy and expensive. We worked closely with Illinois Tool Works (ITW), which made the part, and Ford to develop a new component made from modified Zytel high temperature nylon to withstand exposure to the long-life coolant, be chemically stable and be injection moulded at a high rate.

> "What DuPont brings to the table is the broad materials portfolio that we have."

"The shape of the part and how it was integrated into the intake manifold was a non-trivial application problem, but in the end we developed a solution that was about half a kilo lighter and at a lower cost than the metal alternative. It was developed relatively quickly for the auto industry – from initial concept to ultimate commercialisation in about 18 months – and Ford subsequently adopted it in all 3.5- and 3.7-litre V6 engines as a running change."

PROVEN STRATEGY

Lightweighting is at the forefront of most vehicle engineers' thoughts, as they develop products that will comply with future economy and emissions legislation. Take the mass out of the vehicle and the virtuous circle of weight reduction will harvest immediate benefits.

Naturally, it's an area where Sternberg firmly believes DuPont can help the industry achieve those lighter targets. "Replacing heavy metal parts with components made from DuPont high-performance polymers and composites is a proven strategy. We've been doing this for a number of years now and been able to partner with the automotive industry to replace metal with lighter weight alternatives in a whole host of applications under the bonnet, driveline, chassis, interior, electrical and safety systems.

"Our view is that every part of the vehicle can be reduced in weight and every gramme counts."

He reveals that DuPont is working on a new thermal composite material under the brand name of Vizilon, in addition to other new plastics with improved thermal and oxidation stability that could be

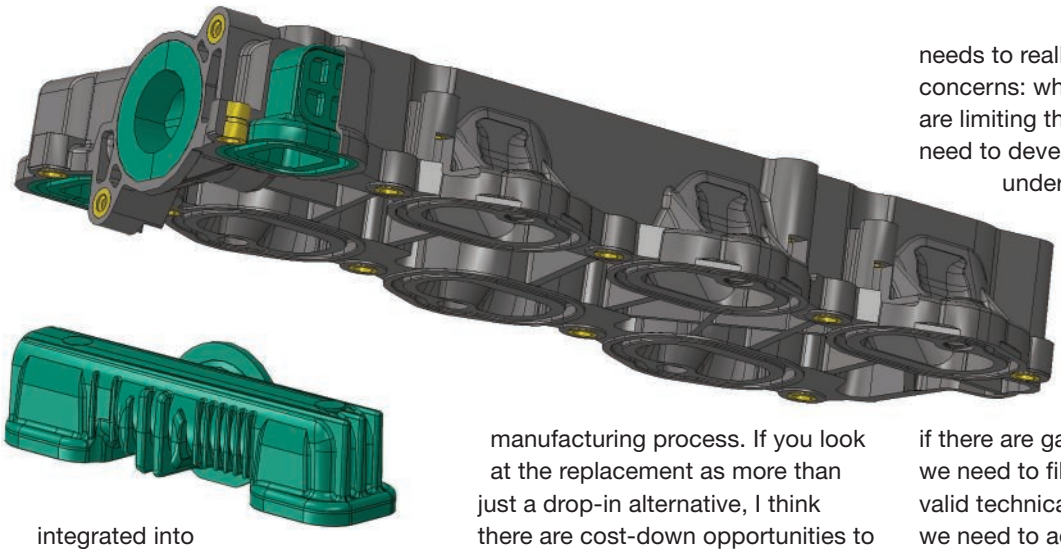

integrated into the same composite family as standalone materials. "It's a thermoplastic composite," he explains, "rather than a thermoset, so that helps to address some of the cycle time issues other existing carbon fibre composites have."

Although not a carbon fibre producer, DuPont, he says, is looking to see if other forms of carbon fibre, "shorter fibres and things like that", can be used and still meet the stiffness requirements needed for some applications that have been identified.

INTO THE FUTURE

"We're looking at structural applications and have a programme with PSA Peugeot-Citroën around side intrusion beams which is pretty far advanced, although it's still in the development phase."

Beyond adding, "it's in the near future, I would say", he wouldn't be drawn further on any likely date for its appearance.

"There are a number of contributions to overall cost: cycle times hurt, raw materials clearly have an impact. But, as with plastic components, one way to address the cost issue is by parts integration and that is very feasible with composites as well, to the extent that you identify applications where you have the opportunity to do parts integration and simplify the overall manufacturing process. If you look at the replacement as more than just a drop-in alternative, I think there are cost-down opportunities to be had."

When I suggest to him that there's a dislocation between automotive engineers and the plastics industry, and a lack of appreciation of the potential advantages that plastic can deliver, in terms of weight and cost, he doesn't totally disagree. "My feeling is there are opportunities for education on both sides. I agree; we – DuPont as well as our competitors – have the responsibility to educate the automotive engineers, in terms of the attributes and capabilities of the materials we produce, and how they can be processed.

TWO-WAY STREET

"On the other side, those engineers need to help us understand which components would be good candidates for these materials, as well as the performance attributes needed, and how working with these materials would align with their assets and capabilities when looking at the total system. So this whole education thing is very much a two-way street.

"I think they understand the benefits; there are enough applications out there that people see the opportunity for weight reduction. The education aspect needs to really focus on the concerns: what are the issues that are limiting the adoption so far? We need to develop a deeper understanding of what those issues are. If they're based on misconceptions around what these materials are capable of doing, then we need to dispel them; if there are gaps in understanding, we need to fill them; and if there are valid technical and cost concerns, we need to address those as well." But, warns Sternberg, "we can't do it alone". The solutions from a

CV

Jeffrey Sternberg, PhD

joined DuPont in 1988 as a synthesis chemist for DuPont Crop protection. He held several roles in the Crop Protection business before advancing to management.

In 2006, he joined Central Research and Development, Materials Science and Engineering, where he led a group focused on developing materials solutions for photovoltaics that improve conversion efficiency, lower cost and extend system lifetime.

On 9 January this year, Sternberg was named DuPont global automotive technology director.

Sternberg earned a Bachelor of Arts from the University of Chicago and doctorate in chemistry from the University of Illinois.

Aged 53, he is married with two sons, aged 17 and 19.

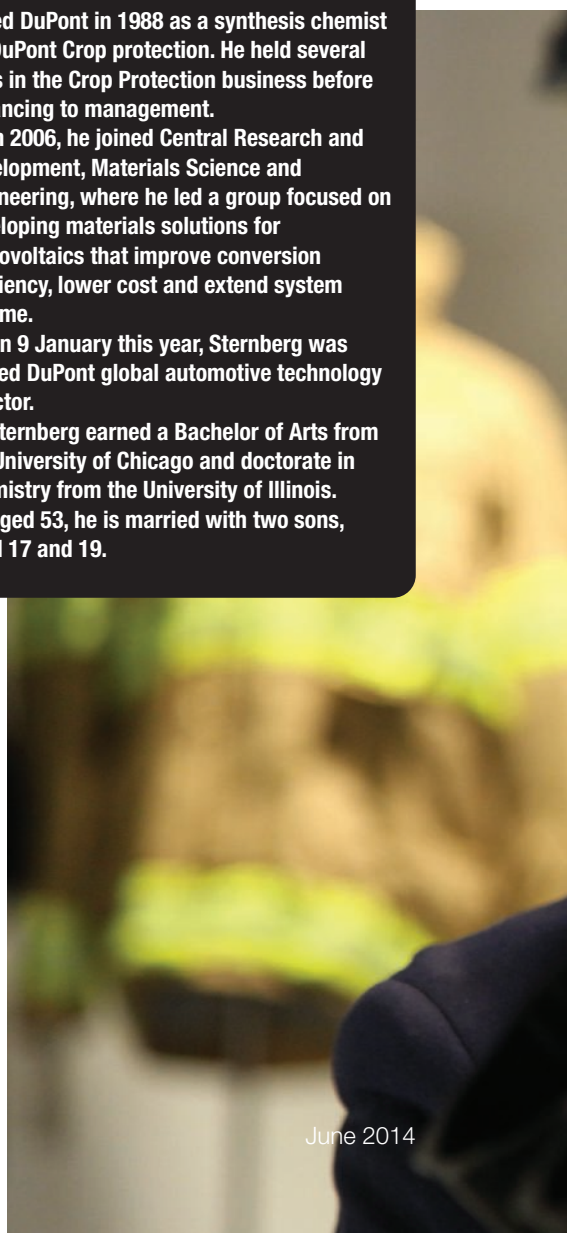

"We see tremendous opportunity for both bio-fuels and renewably sourced polymers. The challenge... is to make them cost competitive."

collaborative effort will come faster and end up being more cost effective and higher quality for all.

"Given the need to improve fuel economy and reduce emissions, based on the regulations the industry is going to be facing, everyone has to be open minded as to considering what additional options are there. We may need to be revisiting some of the things tried in the past that weren't successful by providing new materials and thinking about solutions in a different, maybe more holistic, way. A lot of the low-hanging fruit has been identified and capitalised on. We have to be more creative and aggressive about weight-saving."

COST COMPETITIVE

Sternberg concedes that the environmental challenge surrounding petroleum-based polymers still exists. "We see tremendous opportunity for both bio-fuels and renewably sourced polymers. The challenge for renewably sourced polymers is to make them cost competitive with petroleum-based materials and we're actively working on trying to do that. The potential is there, perhaps, for them to be even less costly than traditional petroleum-based polymers."

And when it comes to recycling? "The industry, not just DuPont, needs to examine the recycle/reuse question holistically, to think about how polymers from a variety of sources might be incorporated into automotive applications – there's work going on in that direction."

With Sternberg even predicting that polymers might one day replace metal in engine blocks – as the Polimotor attempted in the mid-80s – we could be on the cusp of a new era.

Igniting the CREATIVE SPARK

Ryan Gehm and Lindsay Brooke report on breakthrough technologies at the SAE Congress

Whether we're talking about eco-friendly technologies, safety or the connectivity of vehicles, we can achieve success, if we collaborate to create new possibilities," said Chung Kook Park, executive vice president, Performance Development Center, Hyundai Motor Group, and the SAE 2014 World Congress General Chair.

The theme for this year's event was "intentionally ambiguous", Park added, because it applied across the disciplines of the auto industry, including engineering, planning, sales and administration. Indeed, Hyundai and Delphi collaborated together, and with two universities, on the possibility of an advanced gasoline-fuelled engine that achieves diesel levels of efficiency and torque, with lower emissions and cost.

Chung Kook Park, executive vice president, Performance Development Center, Hyundai Motor Group, and the SAE 2014 World Congress General Chair.

From an outsider's perspective, the automotive industry may be seen as "slow and stodgy", said Jeff Owens, chief technology officer and executive vice president for Delphi, commenting on what excites him about the industry today.

"But if you're in it and you're in the technology space, [you're] keeping the environment green, keeping the products providing cleaner and cleaner output, safer opportunities to drive on the highways… and the connectivity.

SAFE, GREEN, CONNECTED

"Those three things – safe, green and connected – provide an enormous challenge and an enormous amount of opportunity in the automotive industry," Owens commented.

Staying connected with industry colleagues, as well as important issues that may lie outside of one's everyday responsibilities, is why people should attend the SAE World Congress, stated Geoff Diamond, a senior planner in the Product Planning Group at Hyundai America Technical Center in Ann Arbor, MI.

It's an exciting time to be involved with the auto industry, Diamond added, especially with the quickening pace of development.

"That's probably one of the biggest excitements for me: to see how quickly the products are hitting the market as we have more and more connectivity in the vehicles, and powertrains are getting more and more advanced, and we're downsizing, and we're trying to get things right for the market to meet regulations etc," he added.

Can a gasoline-fuelled passenger car engine achieve diesel levels of efficiency and torque, with lower emissions and cost – in real-world operation? Delphi and Hyundai are close to finding out. The two companies, in collaboration with the University of Wisconsin-Madison's Engine Research Consultants

Geoff Diamond, a senior planner in the Product Planning Group at Hyundai America Technical Center.

The 1.8-L GDCI engine features extensive modifications, including large EGR cooler, Eaton TVS supercharger and variable-geometry turbocharger, in addition to Delphi 2-step and electronic cam phasers. The piston cooling jets use 'smart' control.

(WERC) and Wayne State University, are in the final phase of a four-year €11 million programme to develop and demonstrate a 1.8-L GDCI (gasoline direct-injection compression ignition) engine installed in a Hyundai Sonata. Final testing is slated for late this year.

Launched in October 2010, the Ultra Fuel Efficient Vehicle (UFEV) Programme is targeting efficiency improvements of 25-40%, compared with a baseline stock vehicle, according to lead engineers at Delphi (which devised the combustion system) and Hyundai.

DEVELOPMENT PHASES

The programme incorporates two development phases. Phase 1, now completed, was aimed at reducing friction and parasitic losses, according to Kevin Quinlan, Delphi Powertrain's vice president of Gasoline Engine Management Systems.

Phase 2, nearing completion, targets improved thermal efficiency from advanced low temperature combustion with GDCI. Sometimes referred to as PPCI – partial premixed compression ignition – GDCI is a "globally stratified, but locally stoichiometric" combustion regime that Quinlan describes as being between the Otto and Diesel cycles. Since January, the UFEV Sonata has been running on dyno rolls at Delphi's Troy, MI, technical centre, with "limited real road testing on public roads" to begin soon, according to Jim Zizelman, Delphi director of engineering, Gas EMS.

Jeff Owens, chief technology officer and executive vice president for Delphi.

INJECTION STRATEGY

The partially premixed combustion is enabled by a multi-late injection strategy using Delphi centrally mounted fuel injectors. The GDCI-like units feature a unique decoupled-armature design and operate at 500 bar. To optimise thermal efficiency, the GDCI engine runs a 14.8:1 compression ratio. Boost is provided by an Eaton TVS supercharger, in combination with a variable-geometry turbocharger.

The engineers were quick to point out that GDCI differs from homogeneous charge compression ignition (HCCI), which generally requires spark ignition under certain load and temperature conditions. "The big reason HCCI has its problems is because its pressure-rise rates are phenomenal. Our rise rates and pressure curves are significantly lower than HCCI," explains Nayan Engineer, manager of Engine Design and Testing at HATCI.

Unique piston-crown geometry and intake tract design, along with EGR (exhaust gas recirculation) rates of 25-40%, enable the GDCI to avoid any HCCI-like uncontrolled combustion, he explained. "We have several 'knobs' we can play with, but we still have to address how we ignite at -40°C – perhaps with [intake] heating. "Once the initial ignition takes place, we operate fully in GDCI mode. We don't jump from spark ignition back to compression ignition as with HCCI. The transients will be easier because of that."

COOL THINKING

Delphi's Zizelman credits a combination of two-step and fast-acting electronically controlled cam phasers with "enabling the cooler combustion, while rapidly getting rid of the EGR when you don't need it". This, he added, avoids misfire and emissions problems. The fully variable valve actuation uses an extra cam lobe to enable a brief moment of valve overlap (opening the exhaust valve on the intake stroke) during warm-up.

The engine also uses electronically controlled oil jets for piston cooling that can be deactivated during cold starts. Early single-cylinder engine tests at Delphi showed the GDCI's indicated specific fuel consumption (mass-based), thermal efficiency and CO_2 emissions to be significantly improved over a diesel baseline. Engineers are hopeful the low engine-out NOx levels will help reduce after-treatment costs.

"Once we get into transient testing, we'll do some step changes," says HATCI's Nayan Engineer. "Our NOx levels are below 0.2 g/kW. And at this point our smoke levels are extremely low, under 0.1." All testing is done with 87 RON fuel, with either E-zero or E10.

HATCI Powertrain engineering lead Nayan Engineer notes that the development team has various 'knobs' it can turn in order to control the GDCI combustion process.

Learn how power can be generated from footsteps

Society's concerns with global warming and the global energy crisis has given rise to alternative energy solutions in urban environments. Pavegen technology converts the kinetic energy from footsteps into renewable electricity and has been used throughout the globe in the last three years, proving that the answer to our future power source could literally be under our feet.

In this Webinar, brought to you by HP and Intel, Pavegen CEO Laurence Kemball-Cook talks about the engineering behind this unique technology, its future energy potential, and the challenges faced in making our cities more sustainable.

To register and watch this webinar, visit www.TechBriefs.com/Webinar218

Brought to you by HP and Intel

Make it matter.

The natural gas solution

New drilling and extraction methods, especially from shale, have been a boon for the home-grown natural gas industry in the US and now around the world. In his 2014 State of the Union Address, US President Barrack Obama urged Congress to support the construction of natural gas fuelling stations and reiterated the important role natural gas will play in his "all-of-the-above" energy strategy to create new jobs, reduce dependence on foreign oil and help curb climate change.

The natural gas vehicle (NGV) market is growing, but not quite as fast as some had hoped. According to NGVAmerica, there are currently about 142,000 NGVs on US roads (more than 15.2 million worldwide) and over 1,300 NGV fuelling stations. In the US, about 50 mostly aftermarket manufacturers produce 100 models of light-, medium-, and heavy-duty vehicles and engines – mostly trucks, and for fleet owners.

FEWER GREENHOUSE GASES

Vehicles fuelled by compressed natural gas typically emit 20% fewer greenhouse gases than their gasoline equivalents, according to the California Air Resources Board. Other than increasing availability of the fuel, it also costs $1.50-2.00 less per gasoline gallon equivalent (GGE).

All of these facts are not lost on OEMs looking to increase their NGV offerings. US market pioneer and long-term entrant Honda launched its latest Civic Natural Gas model in February, claiming it is the only factory-produced natural gas-powered vehicle from a major automaker. Available from Honda dealers in 37 states since 15 February from $26,640 (€19,422), it has a combined EPA fuel economy rating of 31 mpg (13.2 l/kms) – and an estimated fuel cost savings of up to 40%, compared to other gasoline-powered compact cars.

This summer, General Motors will begin selling its first car powered by natural gas. The bi-fuel Chevrolet Impala can switch between compressed natural gas (CNG) to gasoline operation to address any range anxiety issues surrounding the relative lack of fuelling infrastructure and has a total driving range of up to 500 miles (805 km). The car will be sold to both retail and fleet customers, but first-year sales goals are modest at just 750-1,000 vehicles.

NGVs are becoming a global phenomenon, with dual-fuel and biofuel approaches catching on. Recent announcements include Nissan at the 35th Bangkok International Motor Show in March of CNG-powered versions of Navara, Sylphy, and Urvan models that can run on either gasoline or CNG. At the 2014 Geneva Motor Show, Magna International showcased its capabilities with the MILA Blue, a natural-gas powered, A-segment lightweight vehicle concept that produces less than 49g CO_2/km. According to Magna, refuelling with biogas, instead of fossil-derived natural gas, can bring an additional improvement in carbon footprint, in this case to below 36 g CO_2/km.

Though the US Congress recently let natural gas fuel and infrastructure tax credits expire, in March Senator Jim Inhofe (R-OK) and Senator Carl Levin (D-MI) introduced the Alternative Fuel Vehicle Development Act (S.2065). The bill would incentivise the production and purchase of natural gas and other alternative fuel vehicles. The law would remove the current cap placed on the number of credits automakers can receive for the production of alternative fuel vehicles under the Corporate Average Fuel Economy program and allow their use in high-occupancy vehicle (HOV) lanes, without passenger restrictions.

Winning Ways

Ian Adcock exclusively reveals the newly formed Williams Advanced Engineering facility

The old maxim of 'Win on Sunday, sell on Monday' has never been more relevant than with the latest set of Formula One regulations. There might be some whingeing about the, comparative, lack of exhaust noise, but the technology being used to power the cars – downsized, direct-injection engines with energy recovery systems that store and discharge additional power – are more pertinent to production car technology than has been the case for many years. Formula One was in danger of becoming an engineering dinosaur, compared to road car technology, never mind the hybrid systems that had been pioneered by Audi in its all-conquering World Endurance Championship race cars.

NICHE KNOW-HOW

It is this front-of-the-grid know-how, along with its expertise in advanced materials and structures, thermo- and aerodynamics, vehicle dynamics, simulation (whether virtual or on sophisticated rigs) and niche manufacturing capability, amongst other skill sets, that Williams Advanced Engineering (WAE) brings not just to the automotive and transport sectors, but also to manufacturing and engineering on a broader scale.

As managing director Craig Wilson explains: "There's a horizontal and vertical axis to the business. The vertical is skills and capability and, for me, some of the key areas that we have that are very relevant to a number of industry requirements at the moment reside in aerodynamics and thermodynamics, both of which are increasingly growing requirements in the automotive industry for improved efficiency. There's clever use of materials and with that adhesives is another large area; clever use of electric propulsion, energy recovery type systems or energy storage, chassis dynamics and some

WAE managing director Craig Wilson: some of the key areas we have are relevant to a number of industry requirements.

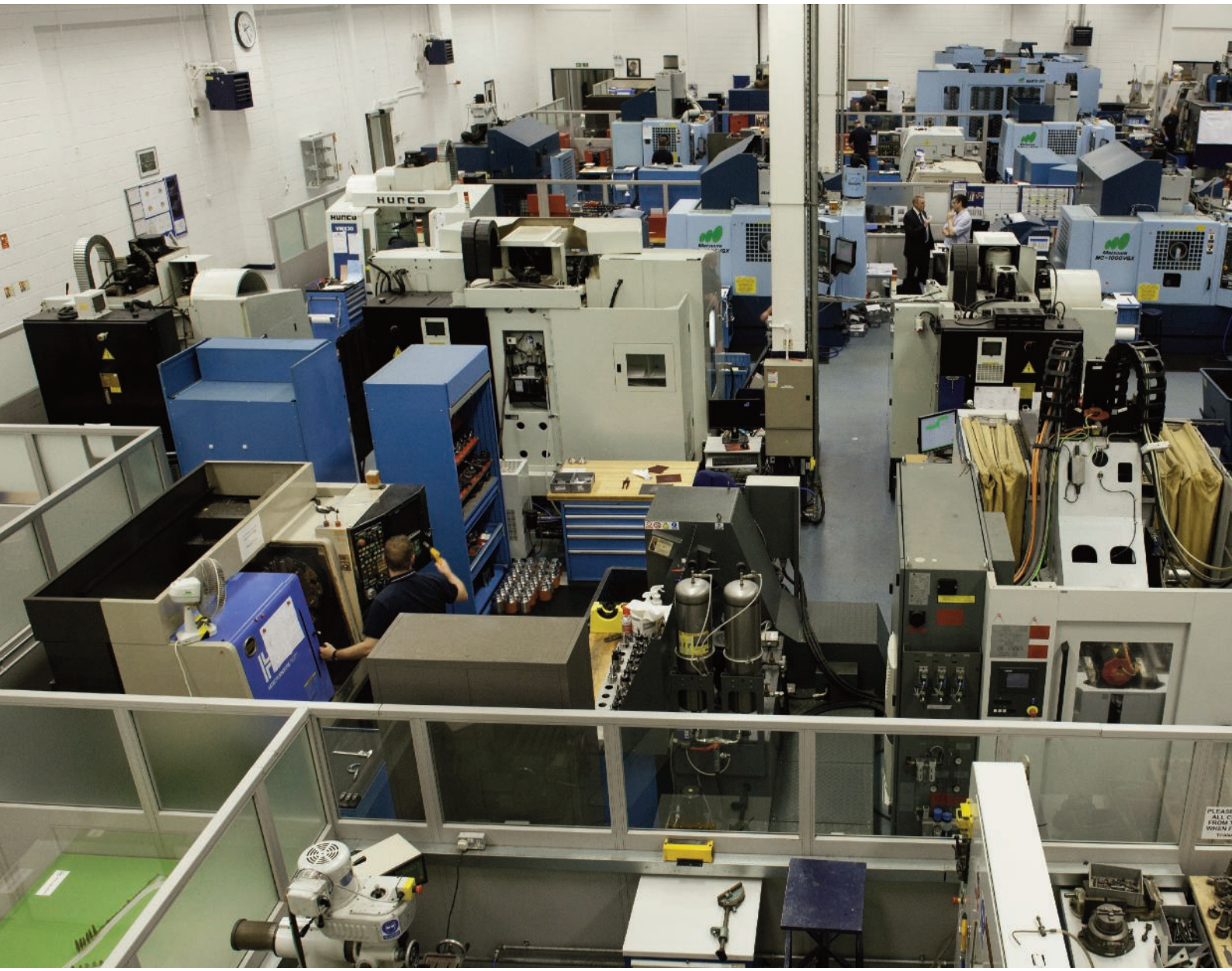

other very automotive specific capabilities.

"There are high-end technologies, linked to an F1 knowledge base, but enhanced by some of the people we have or have recruited throughout the Jaguar C-X75 programme and subsequently."

FICKLE BUSINESS

The mention of Jaguar's aborted supercar programme, I suggest, underlines the lack of security that third-party engineering resources can suffer from, with OEMs cancelling projects at a whim.

"You're right," Wilson concedes. "The automotive business can be very fickle. But going forward, I am very conscious that we don't rely on that environment and expand into other industrial sectors. Since I joined at the beginning of the year, we have undertaken a large review of other sectors and will continue to do that, and then develop the capability set we can offer. Already we're involved in a couple of small projects that could grow into quite large programmes with longevity.

"They will underpin the resource base we have, so I can quite imagine that in five years' time automotive may be 50% of turnover with other sectors- like energy generation, future requirements for buildings, interest from defence where we have one project right now, aerospace or agriculture that needs better efficiency and machines to be more efficient in the future – all potential markets for us.

Main picture: F1 facilities can be called on, if needed. Below, right: Individual assembly bays, tailor made for limited production.

"There's a whole raft of other sectors that possibly need greater assistance than the automotive industry, which is very mature and quite staid in the way it works."

SUPER BASE

The new 3,800m^2 building that WAE moves into this summer was originally built to manufacture 250 C-X75s over a 30-month period, hence the traditional F1-style building bays with a viewing gallery, so owners of the million pound-plus supercar could see them being assembled. But it also provides plenty of desk space for the 200 or so WAE staff to be housed in a single, separate facility to the Williams Grand Prix team. Still being kitted out at the time of Automotive Design's visit, the facility will have all the fabrication and manufacturing amenities you would expect for research and development, as well as niche production. Included in the building are also a number of secure rooms and workshops for third-party confidential projects.

Two technologies high on Wilson's list are flywheels and advanced battery systems. WAE recently sold its small flywheel technology to GKN for an undisclosed sum (see Mike O'Driscoll sidebar), but has retained the large 0.5 megawatt flywheel technology development, which has been repatriated from Williams' former facility in Qatar back to Grove. "In a couple of months' time, we will have one running here on this site," reveals Wilson. "Flywheels are an enabler for alternative power sources where they can even out power peaks and troughs."

WAE is contracted to provide the new Formula E with its high-tech battery systems, which have been designed and are being built at Grove. "Zolt supply the cells, but the majority of the 3,500 components that go into the battery are manufactured here which are then assembled in a dedicated facility. The battery management and cooling was all engineered by WAE," he continues.

"In the case of the C-X75, we did all the hybrid control system for the battery management, controllers etc and the inter relationship with the petrol engine was all WAE know-how. Software is the big unspoken in any hybrid – its development, validation and control – and that's a core part of our capability set, coming off the F1 side and then enhanced by WAE."

TIME FOR CHANGE

Typical F1 materials, such as carbon fibre and other composites, are still a rarity within automotive manufacturing, largely restricted to low production volumes and high-performance cars, but Wilson is confident that picture will change over the next decade and that WAE is well placed to assist OEMs apply these materials to future production vehicles. "The step beyond 2020-25 is really going to start making people think about traditional vehicle structures because consumers won't want smaller cars," he states. "OEMs will have to start thinking seriously about weight

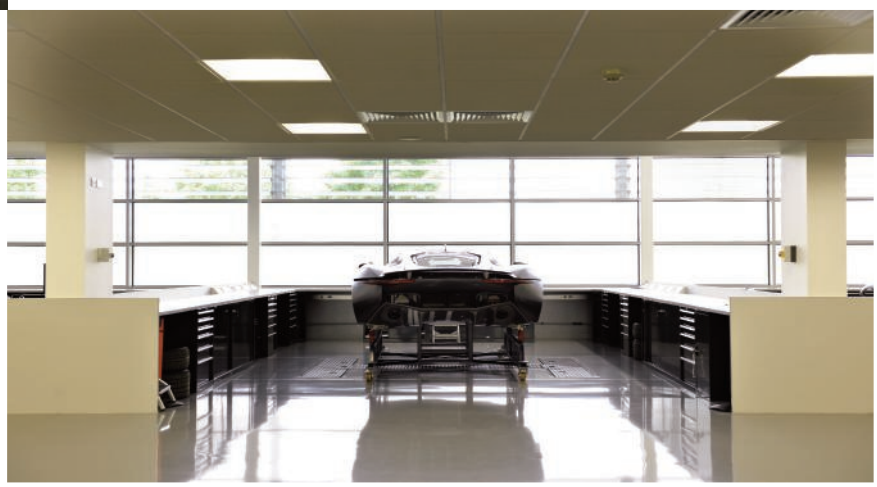

reduction and WAE is well placed to help them with that.

"When you start talking about hybrid materials, you have to start talking about adhesives, because you don't have the ability to fasten and connect in the traditional way through welding and rivets, so adhesives will play greater role going forward. The automotive industry is very traditional in its way, because it has got a huge investment in its infrastructure and capital, which makes it difficult to say we're going to use different materials in a new way.

"But the pressure is on from legislation and CO2 and, if that continues as it has done I can't see anything other than lightweight materials being introduced. It won't be a case of 'nice to do', but 'essential to do'.

NEW THINKING

"I think there's a whole raft of technology solutions out there that are not even being considered, because, in some cases, it's too difficult for people to imagine offering something that is so far from their own manufacturing processes. For the high volume producers, it's like a machine, so they don't want to introduce anything that's too different from what they're used to. Legislation and consumer pressure will change that – and that will only increase over the next 10-15 years."

UNIQUE SOLUTIONS

Formula One might be bound by a strict set of regulations, but they only serve to spur the designers and engineers at teams like Williams to come up with new interpretations and ingenious solutions on an almost weekly basis to gain a few tenths here and there over their grid rivals. With 35% of its staff having an F1 background, as well as the ability to pick the brains of Formula One teams' engineers as and when needed, it's not surprising to learn that Wilson is confident that WAE will develop unique engineering solutions for third-party applications. "We started off with 30-40 engineering projects and have whittled that down to two or three that we think have a really compelling business case: one is based off a previous incarnation of F1 Kinetic Energy Recovery (KERs) development that we're looking at reconfiguring for a more traditional automotive application and two others that I can't talk about, because they're quite novel," he says. "I do believe we will be well placed to provide technological solutions for the problems of tomorrow, based around the competences we have here and innovative thinking."

From what Wilson has said, it seems clear that race track solutions and technology could be on a production car sooner than we might have originally anticipated.

SHARPER FOCUS

Mike O'Driscoll took over as chief executive officer of WAE in May 2013, having been a non-executive director for two years prior to that.

"We needed to sharpen the focus of our advanced engineering group," he concedes, "and that's what we have been trying to do; and, at the same time, by focusing, ensure we were concentrating on those aspects to the business that are core to the future." Williams' presence on the Qatar science and

technology park ceased after three years and the core technologies being developed – road-based simulators, as opposed to track simulators, and large flywheel development – relocated to Williams Grove HQ.

"I think it was successful," comments O'Driscoll. "It was also part of our desire to refocus really, essentially F1 on one hand and the Grove-based advanced engineering on the other.

"We sold the rights to the small flywheel to GKN land systems, but separately from that we do retain the rights to the large flywheel that would be used in, for example, grid stabilisation. In fact, it was that technology we were developing in Qatar quite separately from the Williams hybrid business here at Grove that was focused on vehicle-based systems.

"The production engineering skills required to take it from our research and development to production are entirely different and that's not part of the core skill base here at Williams.

"In order to take the product to a broader market and make not just 25 a year for motorsport, but 25,000 annually, we needed to be able to engineer it for production and ensure, as part of doing that, we could take the bill of materials cost down significantly. It will take a world-class engineering organisation with a very large footprint to be able to do that effectively and GKN can do that. The deal made perfect sense for us and we hope it will be part of a longer-term relationship with GKN.

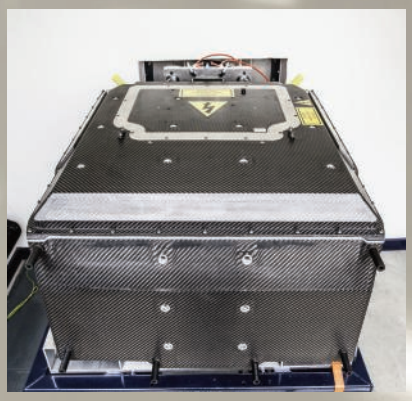

TRANSITIONAL YEARS

"It's fair to say that 20013 and 14 are transitional years for WAE as we refocus," he adds. "We have got some really exciting projects that we're working on right now, of which Formula E, which kicks off later this year, is one; and we will be supplying the batteries to all the teams, so we're pushing the boundaries of performance and our understanding of cooling technology and range, as well as performance. I see huge potential for hybrid combinations moving forward and so for us to be operating in that space is correct.

"You know, advanced engineering is, in many ways, about energy-efficient solutions, since everything we focus on – whether its aerodynamics, lightweight materials or power train technology – are all about delivering more performance from less energy input. To that extent, we're answering one of the big problems that we face as a society. For that reason alone, I think we're in the right space, with huge potential."

Left: Mike O'Driscoll: 2013 and 2014 – transitional years for WAE. Below: Formula E batteries, engineered and manufactured at Grove.

DRIVERLESS FUTURE: Steering a safe course

Despite Google unleashing 100 driverless, motorised pods on to the road, the prospect of automated driving over long distances is still some way off. However, it has put the need for rigorous safety standards centre stage, as Ian Adcock reports

News that Google had put a test fleet of 100 driverless, motorised pods on the road in California at the end of May caused quite a stir. Interestingly, it coincided with a statement issued by the Transatlantic Trade and Investment Partnership (TTIP), in which the European Automobile Manufacturers' Association (ACEA), the American Automotive Policy Council (AAPC) and the Alliance of Automobile Manufacturers (Alliance) called for greater harmony between the US and European OEMs when it comes to safety requirements and new technologies under the Global Technical Regulations (GTR).

The two are not unconnected: although the popular media branded Google's experiments as 'cars', they are little more than automated two-seater urban commuting pods that don't rely on embedded rails or unique lanes to guide them. What they do demonstrate is that automated driving, albeit only at speeds up to 40 Km/h (25mph), is feasible, but the reality of automated driving over long distances is still a distant reality. However, and this is where the TTIP and GTR come in, there will need to be global standards that can be applied, with suitable modifications to meet regional requirements, to all vehicles.

MARKET DEMANDS

It's a point not lost on Tom Overington, Ford's automotive safety officer Europe: "The One Ford policy enables us to engineer products for all markets, based on global platform concepts. If you look at the 'B' segment, we have a platform that's globally practically the same, but we can't send exactly the same product everywhere in the world, as that would lead us to being uncompetitive in the developing markets. It's about being able to understand what the markets want and need – not just from a regulatory point of view, but also from public domain organisations like EuroNCAP that are growing around the world."

The big push to reduce road injuries – hence the march towards supposedly infallible driverless cars – will only be achieved by developing complex and powerful sensors, algorithms and the computing power needed to process them, says Bosch senior vice president for driver assistance, Frank Melzer. "Advances will be driven by having more computing power and software, more knowledge available in the software available and more training of the algorithms."

The big breakthroughs will come from what Nvidia's director marketing Danny Shapiro describes as "delivering super computing power to the car". And he states: "At the Consumer Electronics Show earlier this year [Las Vegas, January], we introduced our new Tegra K1 mobile processor, which is based on the same technology that goes into super computers in the cloud. The most energy-efficient super

All-round sensor fusion to detect other road users is the ultimate aim.

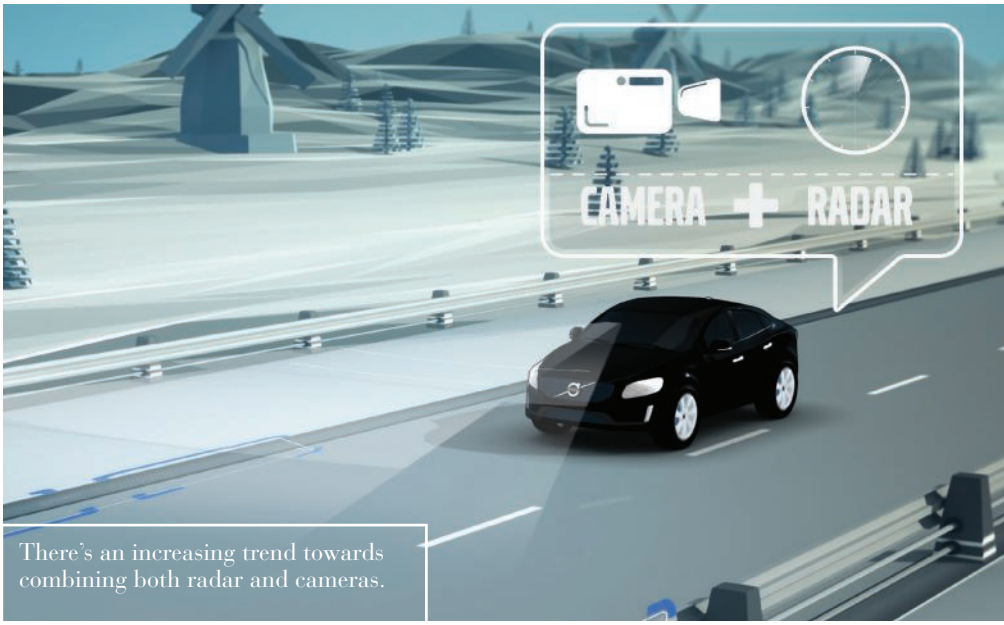

There's an increasing trend towards combining both radar and cameras.

computers are powered by Keplar architecture and we've brought that to our Tegra mobile processors.

"This will allow us to do everything on the car, including sensor fusion, gaze tracking and driver alert monitoring. By putting a camera in the car, we can use Tegra K1 and computer visions software to monitor if the driver is paying attention and where they're looking, and combine that with driver assistant systems.

"We also see more of a merging of driver assistance into the screens and head-up display (HUD). Our processor is able to analyse what's going on around the car through computer vision or sensor fusion and then display appropriate visuals, whether they are on a cluster, HUD or a centre screen."

ADVANCED ASSISTANCE

Nvidia's view of technology being used to make cars much safer with autonomous driving is where the industry is ultimately heading for, but in the near and medium term it will be, says Shapiro, the extensive roll-out of advanced driver assistance that will dramatically reduce the number of accidents and make people safer on the road.

"We see every car ultimately needing a very powerful computer to be able to do the computer vision, sensor fusing and all the other processing that's going to be required in a modern vehicle," he states. "If we round it up to 100 million vehicles, with $1,000 worth of new electronics in each, that's $100 billion, which is maybe 15 years out from now. Half of that will be by the end of this decade, while today it's probably at $5 billion. That's a ten-fold increase in the types of advanced computing and technology going into the car, advanced sensors and other advanced technologies.

"I've heard that Google is spending $70,000 on the electronics on their self-driving cars, though the goal is to get it to much more affordable range obviously.

"Also at the Consumer Electronics Show, we announced with Audi that they will be bringing to market a central autonomous driver assist system that will do traffic jam assist and piloted drive modes with self parking , the first step towards self-driving capabilities.

"That's the way to introduce these technologies in controlled settings and situations, and also to help prove to the world that the car can drive itself and be safe."

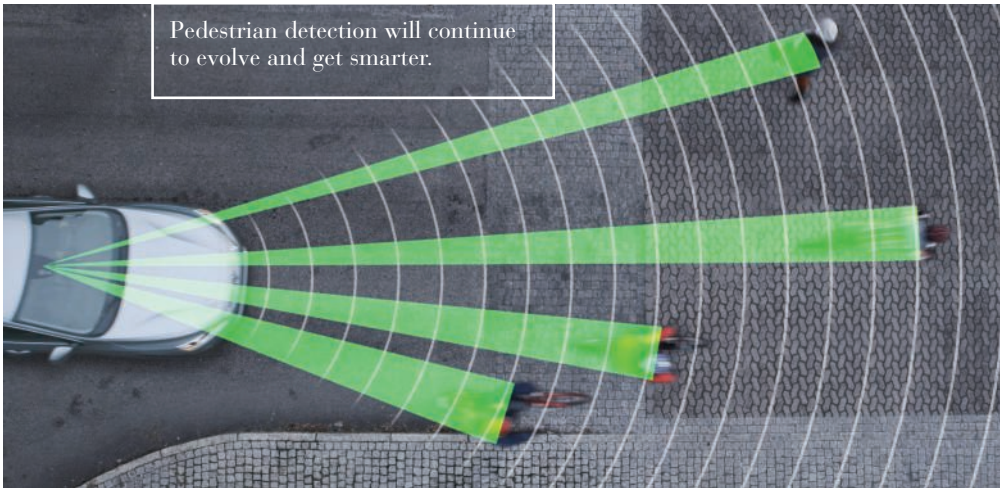

Pedestrian detection will continue to evolve and get smarter.

Speed of change

Today's most advanced speedometer systems have jettisoned electro-mechanical dials for virtual ones. But that brings its own challenges, as Terry Costlow reports

If he were alive today, I have no doubt that Otto Schulze would be amazed at how his invention of the speedometer, first patented by him in Berlin on 7 October 1902, has developed. Indeed, to such an extent that the most advanced systems, such as those featured in the new Audi TT debuted at Geneva Salon earlier this year and the eighth-generation VW Passat, which makes its public debut at the Paris Salon in early October, now eschew electro-mechanical dials for virtual ones.

Challenges for this new breed of instrumentation are when design teams try to cram more features and functions into dashboards or strive to increase efficiency, want chips that save space and reduce weight. Maxim Integrated Products is focusing on these challenges with a pair of products that reduce board space and let engineers transition to lighter-weight cabling.

Maxim has unveiled two devices aimed at reducing space in cramped fascias. The 3.12-GB/s Gigabit Multimedia Serial Link SerDes chipset lets designers of high-resolution automotive infotainment systems use lighter, less expensive coaxial cables. The other device, the MAX16993 power management IC (PMIC), squeezes three channels into a chip that can operate with smaller external components, cutting board space requirements in half.

The PMIC, designed primarily for instrument cluster and centre stack displays, consumes just 25 µA of quiescent current, meeting automaker requirements that limit instrument cluster module consumption to less than 100 µA in standby mode. The chip integrates a high-switching-frequency controller and two output converters capable of 3 A each, reducing space requirements over discrete designs.

"Users can save more than 50% in board space versus using three separate dc-dc converters and larger external components," says Dan Dempsey, executive director in the Automotive Business Unit at Maxim Integrated. "Running at 2.1 MHz lets designers use smaller inductors and capacitors. Instead of using parts packaged in metal cans, we let them use ceramic capacitors, which are much smaller."

INTERFERENCE CLEARANCE

He notes that this frequency also helps electronic designers avoid interference with AM bands. Normally, dc-dc converters operate in lower frequencies, so they must be shielded to avoid this interference. But at 2.1 MHz, all AM bandwidth noise is

"Users can save more than 50% in board space versus using three separate dc-dc converters and larger external components" Dan Dempsey

The SerDes chipset allows developers to transition from the shielded twisted pair cables now common in infotainment systems to coax cables, which can trim cabling weight by 50%. It also extends cable lengths to 15m (49 ft) to support rear-seat entertainment displays.

Each serialiser and deserialiser improves EMI performance by offering spread-spectrum capability without requiring an external spread-spectrum clock. The chipset can work with high-resolution centre stack and rear-seat displays, while also supporting megapixel camera systems. The chips can drive 1920 x 720 pixel displays with 24-bit colour resolution.

Left: Maxim's chipset and power management IC help deliver compact instrument packs. Below: New Audi digital instrumentation.

eliminated, Dempsey states. The PMIC also trims power consumption, which is getting increased attention as automakers struggle to meet tighter fuel consumption rules.

"As carmakers focus more on emissions and low power electronic components, more are using dc-dc converters, instead of low dropout (LDO) regulators. When you go from an LDO to a dc-dc converter, you're going from somewhere around 50% efficiency to 80-90% efficiency."

The three channels can be set to work with parts that have different voltages. For example, channels may be linked to conventional 5-volt ICs or to lower voltages like 3.3 V.

SURREAL OVER REAL

With so much information and data being delivered to the driver, some OEMs are now working on head-up displays (HUD) to deliver speed and directions, the latter by augmenting reality and overlaying the real road with a virtual one to guide the driver.

Volkswagen's first HUD application on the new Passat relies on an extendable glass panel rising out of the fascia before the windscreen. This, it claims, as does Peugeot who use a similar system, obviates the need for expensive-to-replace finely contoured windscreen HUD systems that BMW, for instance, employs.

However, Eastman might disagree. Its Saflex acoustic HUD interlayer, it points out, ensures the highest quality projected image for each vehicle, while improving acoustic comfort via reduced transmission of exterior noise.

Traditional glazing results in double images or 'ghosting', due to parallel surfaces of glazing. Eastman, the pioneer of HUD films, developed a wedge-shaped interlayer, enabling non-parallel surfaces in HUD applications, which eliminates ghosting, as well as providing the desired optical correction for a high quality projected image.

Saflex HUD interlayers are manufactured employing a unique process that enables the production of two outer surfaces that are slightly out of alignment, allowing windscreen production with the right optical correction.

Meanwhile Delphi, which supplies PSA Peugeot-Citroën with its HUD display, is thought to be working on new HUD technology. "Not a real HUD, but a high mount display, as some OEMs want to show it in the windscreen, whereas PSA wanted a small screen on the binnacle," a spokesman told Automotive Design.

Whichever way you look at it, what with the automotive landscape about to change forever with more hybrids and electric vehicles on the horizon, plus all the connectivity within the car, Shulze's original speedo has been consigned to history.

THE SEARCH

New down-sized engines with higher compression ratios and searing turbochargers are fuelling the race for materials that thrive in the heat. *Automotive Design* reports

Material choice is becoming ever more dominant as engineers strive to reduce the carbon footprint of vehicles, with the triple payback of cost, weight and recyclability all taking equal prominence. These selections apply to all areas of the vehicle and none more so than under the bonnet, which is becoming an increasingly harsh environment for materials to survive. The advent of down-sized engines with higher compression ratios and, increasingly, hot turbochargers in tightly packaged confines only serves to exacerbate the challenge.

And with manufacturers opting for multiple turbochargers on diesel engines especially, the task is even more challenging, compounded by OEMs now trying every trick in the book to gain even greater efficiencies and minimise emissions.

WARMING TO THE TASK

But there's help at hand. At last year's Frankfurt IAA, for instance, Röchling revealed a multi-layered engine encapsulation system developed from low weight thermoplastic (LWRT).

The 15mm thick 'Isoraloft' reduced warm-up time on a 1.6 diesel at 12°C by 40% and retained 10 Kelvin (K) more heat after seven hours, leading to a 2-3 g/kms CO2 reduction, as well as an 8dBa lowering in sound levels, all for the cost of about €30-50, which would quickly be recouped in fuel savings, says Röchling. Similarly, Zircotec's plasma-sprayed ceramic coating can lead to under-bonnet temperatures being lowered by as much as 50°C, while the flexible, triple layered 0.25mm Zircoflex is a lightweight solution to engine encapsulation that can be easily cut and tailored to requirements. It is currently used by an unnamed North American OEM in small 70-80mm squares.

NOISE ABSORPTION

Autoneum has also expanded its range of lightweight and multi-functional aluminium heatshields. Based on RIMIC technology, it absorbs sound, reducing the interior and exterior noise of vehicles. What is impressive about the shields is their multi-functionality, light weight and heat resistance to 500° C.

With RIMIC, Autoneum has developed a special perforation in the aluminium that absorbs vehicle noise. Using in-house production processes, these perforations are applied only at predefined areas to ensure optimal heat protection and durability, with the acoustic performance controlled by the number of perforations.

Furthermore, high-frequency sounds can now also be absorbed when combining the aluminium heatshields with sound absorbers like Theta-Cell. This technology, developed by Autoneum, is based on a polyurethane foam formula and is ideally suited for use in the engine bay, thanks to its acoustic and thermal properties

Following successful validation, the insulating skin ISOLITE XP, originally used in the aviation sector, has found an application in automotive engineering. It enables more insulating material to be used, while maintaining the same installation space. This opens up entirely new possibilities in thermal

HOTS UP

and acoustic insulation. The new insulating skins expand by up to 30% the first time they are exposed to heat, without contracting once they cool down. By automatically adapting to the surface structure, the skins provide better acoustic sound-absorbing properties and self-damping than conventional insulating materials.

The skins contain no carcinogenic ceramic fibres and thus comply with REACH (Registration, Evaluation, Authorisation and restriction of CHemicals) regulations. Instead, they use a shot- and particle-free long fibre that ensures greater mechanical stability.

TURBOCHARGED AIR DUCT

As the material contains no vermiculites, the insulating fibres display improved stability during vibration and better tensile strength following elongation. It also reduces blowing of the insulating fibres, in the event of damage to the outer liner (metallic exterior casing). Varying the composition of the totally biodegradable insulating skins means they can be used in different applications, and adapted to a diverse range of areas and tasks.

Röchling has also developed a turbocharged air duct that meets the needs for better engine response, as well as improved fuel economy and reduced emissions. Featuring a significant weight reduction and optimised space-saving architecture, this environmentally-friendly application is 100% recyclable.

The turbocharged air duct weighs 1.4 kg less than its predecessor, partly the result of a reduced number of components – for example, the omission of several rubber hoses and metal clamps. Also, due to the more compact design, it was possible to reduce the packaging space in the engine compartment.

HIGH PERFORMANCE

At the same time, vibrations or movements of the air duct are now absorbed by the whole component, instead of at certain specified positions only, resulting in a reduction of gaps to other parts.

This high-performance thermoplastic isomer (TPE), consisting of alkyl acrylate copolymer (ACM, acrylic rubber) and polyamide 6 (PA6), combines the properties of two materials in one composite; it is more oil, grease-and heat resistant, has improved flex fatigue properties and ensures flexibility at low temperatures, while the polyamide plastic phase is easy to process, withstanding 2.7 bars of overpressure at 125 °C.

A steer in the right

Chris Needes, global market manager chassis and powertrain at Saint Gobain Performance Plastics, discusses bearing development with Ian Adcock

Steering feel is one of the most elusive vehicle attributes that OEMs strive to perfect: some achieve it, while others manifestly do not. Engineers such as Ford's one-time chief technical officer Richard Parry-Jones are obsessed by it. He used to talk about the 'car park test', whereby you could tell within 50 metres if a car had good steering feel or not – invariably his test set the benchmark for others to try to attain.

That task has been made harder with the growing popularity of electrical power-assisted steering, as Saint Gobain Performance Plastics' Chris Needes explains: "We recognised that the yoke bearing is an area where friction gets built up, but tends to be accepted," he says, "because it has been there for years and overcompensated in hydraulic systems by using large(r) pumps. With the advent of electronic power-assisted steering (EPAS), smaller motors and on-demand steering, there's still a need to overcome that friction, which could manifest itself as a judder in the steering or unwanted noise."

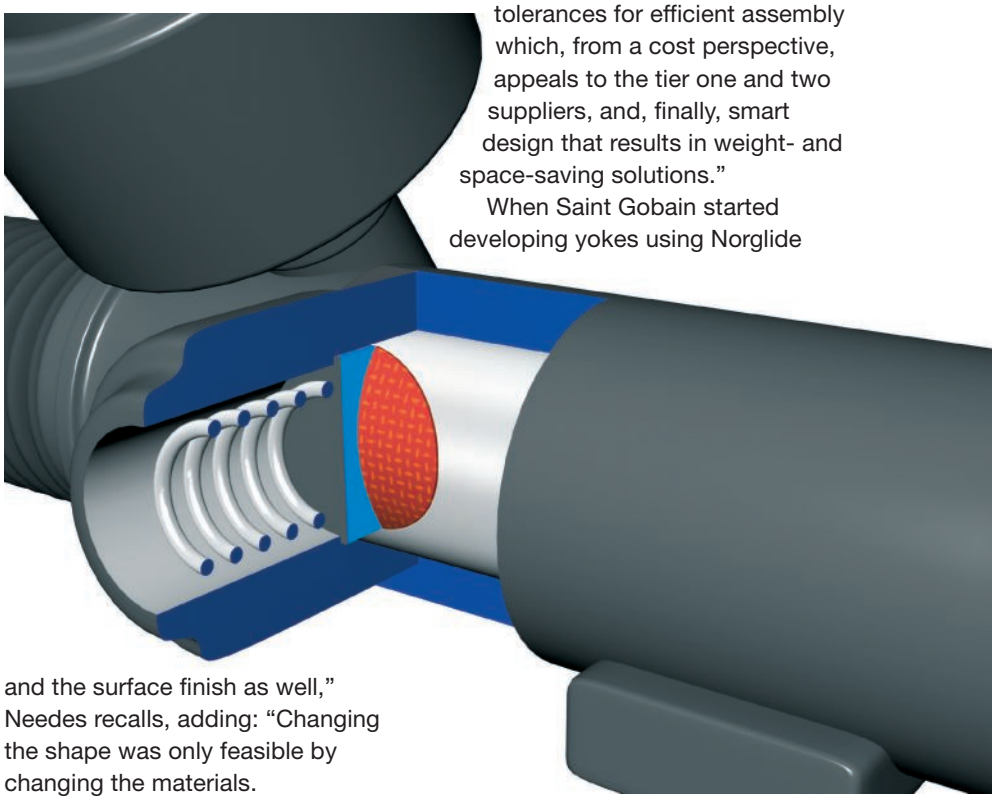

SHAPING UP

When Saint Gobain started looking at this market over a decade ago, they had to overcome orthodoxies about the yoke's contact patches shape. "If we were going to change that, then we had to change the bearings, the rack shaft tolerances and the surface finish as well," Needes recalls, adding: "Changing the shape was only feasible by changing the materials.

"If you change the shape of the current practice poly tetra fluoro ethylene (PTFE) yoke bearings, what happens is that the load is spread into a very thin layer and that increases wear. And once that plastic and the PTFE are gone, you're sitting on high friction material, which pushes above levels anyone expects to see."

Over the years, states Needes, Saint Gobain has built up a number of core competences that are appreciated and recognised by OEMs. "We offer long-life solutions, expertise in damping noise and vibration, perfect fit with optimised tolerances for efficient assembly which, from a cost perspective, appeals to the tier one and two suppliers, and, finally, smart design that results in weight- and space-saving solutions."

When Saint Gobain started developing yokes using Norglide bearing material, it was found that, by altering the contact patches' shape and the contact pattern, low friction was maintained throughout a 5,000 cycle test, whereas rival materials and designs degraded over the same procedure. "We started to explore it more and found that life continued, whereas in other bearings the friction changed.

"We found that some grabbed hold of the shaft, because it was too polished and, as it grabbed hold of the bearing, it juddered, instead of being a nice, smooth, linear motion. This judder started to create a noise; if the engine's on, you wouldn't hear

DIRECTION

it. But in cars with stop-start and hybrids etc, if you hear a noise in the steering, it's critical."

TESTING TIMES

To further understand the process, Saint Gobain built its own test rig to measure friction, wear, temperature variants and hysteresis torque loop, so it can look at each individual torque cycle. "Basically, we can put four bearings in, each with a 10 kN load for accelerated wear.

"One of the things we highlighted was shaft surface finish; a lot of money is spent on grinding rack shafts to a very polished surface finish, somewhere between 0.06 and 0.2Ra – but is that value for money? We found that, if you went to a highly polished finish, the amount of stiction increased. A polished surface on a very highly polished PTFE grabs hold of it and increases the wear slightly on the polished shafts by pulling off patches of PTFE. Then, if you went to a rough shaft, say 0.3-0.5 Ra, we found the wear also increases, but this is more by abrasion. Norglide optimises rack shaft finish somewhere around 0.18 to 0.23 Ra

"So, do steering column manufacturers need to highly polish rack shafts? Possibly not – with a cost saving for them as well. We also tried lots of different greases, and certain ones work better with different Ra ratings and profiles. What we find with Norglide is that, rather than being a smooth surface, it's like a dimpled effect that retains grease in pockets, so it lubricates itself.

"Going forward, will we make new materials for the yokes, now that we understand what we have and have got all the test rigs? Yes, we're looking to expand and develop a range of yokes to satisfy different market criteria. It's already used on 'A' and 'B' platform cars, and is currently being explored for 'C' platform models with great results, so I really think it's a solution that's valuable across the marketplace as more OEMs adopt electrically assisted steering systems."

Hans Roth, director technology marketing infotainment division, Harman

Infotainment next-gen challenge

"With our next-generation scalable platform, we're addressing three industry issues in the range of infotainment.

"One: how can the car and infotainment system be kept up to date over the whole vehicle lifetime?

Two: with all the cars being connected, we have an increasing chance of a cyber attack, which is even more of a threat, if you think about autonomous driving. That's why we have put into our system software architecture which is our next-generation scalable platform. This uses Hypervisor technology which is industry proven in IT and servers over many decades to completely separate critical processes from each other, even if they run on the same hardware.

"Infotainment systems can be vulnerable to downloads, but our system runs that on one domain or core and the vehicle-critical functions on a separate core. The Hypervisor completely virtualises the two domains, so they do not even know from each if they are accessing the same physical memory area.

"Harman has SSL encryption and web certificate measures being designed into the next-generation technology to prevent cyber attacks.

"The third issue is the integrated driver assistance functions, which also run on a trusted area. We are now evaluating eight core processors from the smart phone industry for automotive applications. These are 10 times more powerful than those used currently. This means we can assign a number of cores for that part and, maybe, a couple of other cores for another task, whilst providing cores for third-party safety-critical functions.

"With that system, we are able to reduce the overall number of ECUs and system costs, because we're using those power machines to add safety-critical functions into the infotainment, which wasn't previously possible in the past.

"Currently, we're discussing with OEMs how to block hackers and cyber attacks. Do they want security updates constantly over the air, for example? Or you could have SSL encryption or an OEM's certificate.

"It's the same with software updates: the security update maybe combined with a hardware master key, like you do with online banking.

"Or, if you're downloading music etc, the content itself could be viral, but it's more likely to be a new player for music that could have a virus. The software would automatically ask if it's an OEM certified application through the web certificate, with additional validation from the OEM. If it isn't, it would be blocked."

"Harman has SSL encryption and web certificate measures being designed into the next-generation technology."

SAE INTERNATIONAL™

IMPROVE INTERIOR PACKAGE DESIGN, INCREASE VEHICLE SAFETY, AND ENSURE INTERNATIONAL COMPLIANCE WITH THE SAE H-POINT MACHINE

A three-dimensional manikin that provides the physical representation of driver H-points, the ***H-Point Machine (HPM)*** is used to define and measure vehicle seating accommodations. Offering a deflected seat rather than a free seat contour as a reference for defining seat space, it is a vital tool in the design of interior packages.

Available through SAE International, the *HPM* is used in conjunction with SAE Standard J826 and is currently referenced in various federal and international regulations including NHTSA's FMVSS in the US and ISO standards. Utilized in testing for compliance to such regulations involving impact/crash, head restraint, or vision, it is the required safety certification tool for vehicle production in many countries around the world. Additionally, those who need to locate seating reference points and torso angles as reported by manufacturers employ the *SAE H-Point Machine*.

SAE provides comprehensive support for the *HPM* including, calibration, spare parts, and maintenance. And for advance design and research applications, the ***HPM-II*** is available, which includes reformed shells for a consistent and reliable fit in bucket seats, an articulating back for lumbar support measurement, and the ability to measure the H-point without using legs resulting in simpler installation.

View a free demonstration video at www.saeinternational.cn/hpoint/ to see how the HPM-I and the HPM-II offer a means of obtaining passenger compartment dimensions.

SAE INTERNATIONAL
+1.1.724.776.4841

China
+86.21.61577368

www.sae.org

SAE is an international body of engineers and practitioners dedicated to the advancement of mobility technology. Based on the fundamental of providing a neutral platform for collaboration and informed dialogue, SAE has been providing the common engineering requirements for new vehicles, advanced technologies, and applications since 1905.

P136467